Hidro
Pnevmo
Tehnika
3, Eng. Felix Vozhely St.,
6100 Kazanlak, Bulgaria
Tel.:+359 431 62 228
+359 431 68 440
e-mail: info@hpt-bg.com
www.hpt-bg.com

DIVIDING AND COMBINING VALVES

KDS...- ..

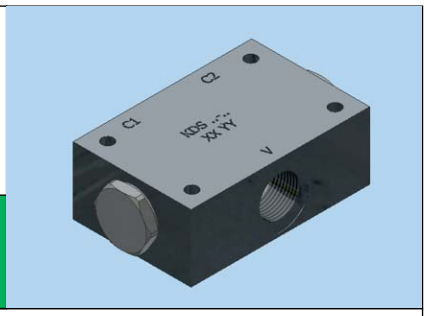

These valves provide division of inlet flow "V" into two equal parts "C1" and "C2", and recombination of the equal flows in the reverse direction "C1" and "C2" to "V". They are pressure compensated in order to maintain the divided and/or recombinated flow constant, largely independent from the inlet "V" port, and the pressure differences at the actuators.

In order to provide limited slipping ±5% together with minimized pressure losses, the valves are calibrated for different flow ranges.

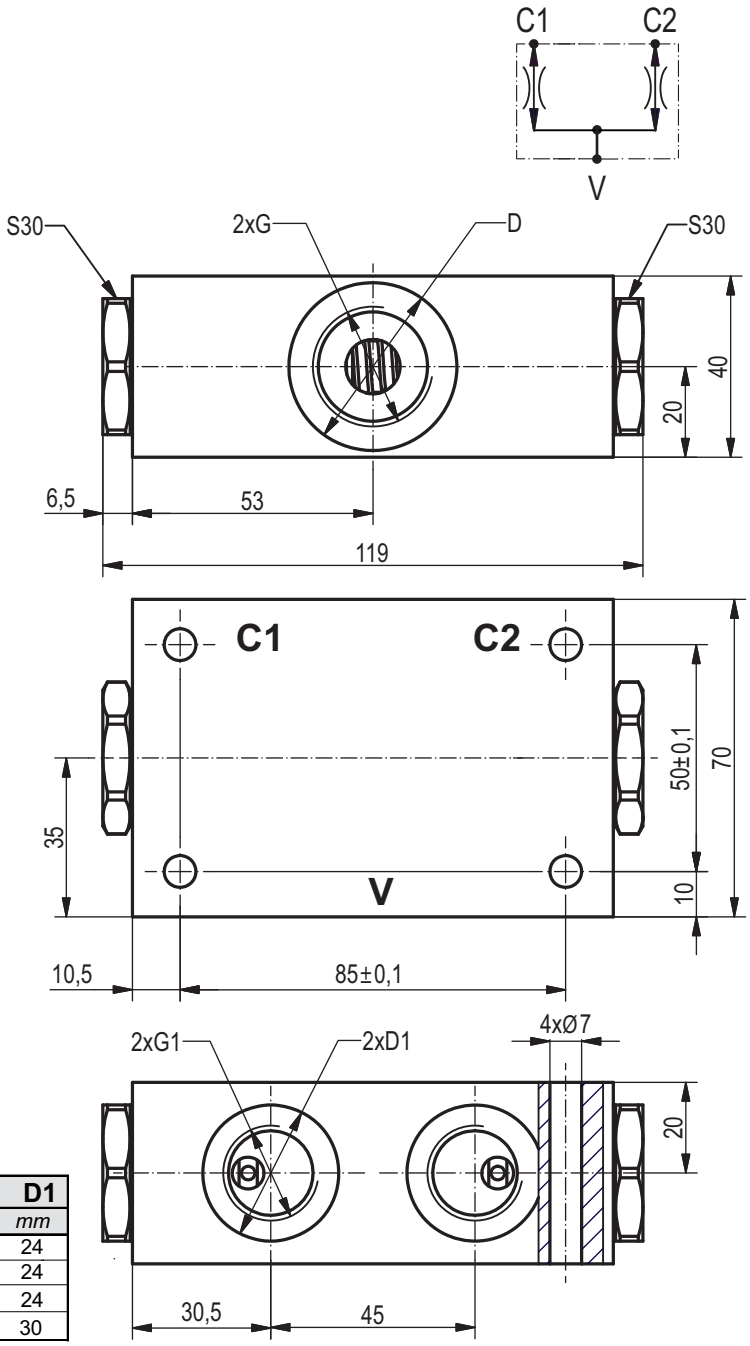

Type	$P_{max.}$	$Q_{min.}...Q_{max.}$	G	D	G1	D1
	bar	*L/min*		*mm*	*mm*	*mm*
KDS 38-08	250	1...8	G 3/8”	24	G 3/8”	24
KDS 38-20		8...20	G 3/8”	24	G 3/8”	24
KDS 12-40		20...40	G 1/2”	30	G 3/8”	24
KDS 34-90		40...90	G 3/4”	37	G 1/2”	30

All performances and calibration are carried out by using hydraulic oil with viscosity approx. 46 cSt at 50°C.
Temperature range: -20°C...+80°C. Filtration absolute: 25µm
Valve setting pressure: 15...20 bar over the working pressure.

ORDERING CODE

KDS - 38 - 40

Type

Port threads “G”- code:
G3/8” - 38
G1/2” - 12
G3/4” - 34

Qmin-Qmax - code:
1...8 - 08
8...20 - 20
20...40 - 40
40...90 - 90